SENCO®

FinishPro® 11

ISANTA MEMBER

Parts Reference Guide

CE

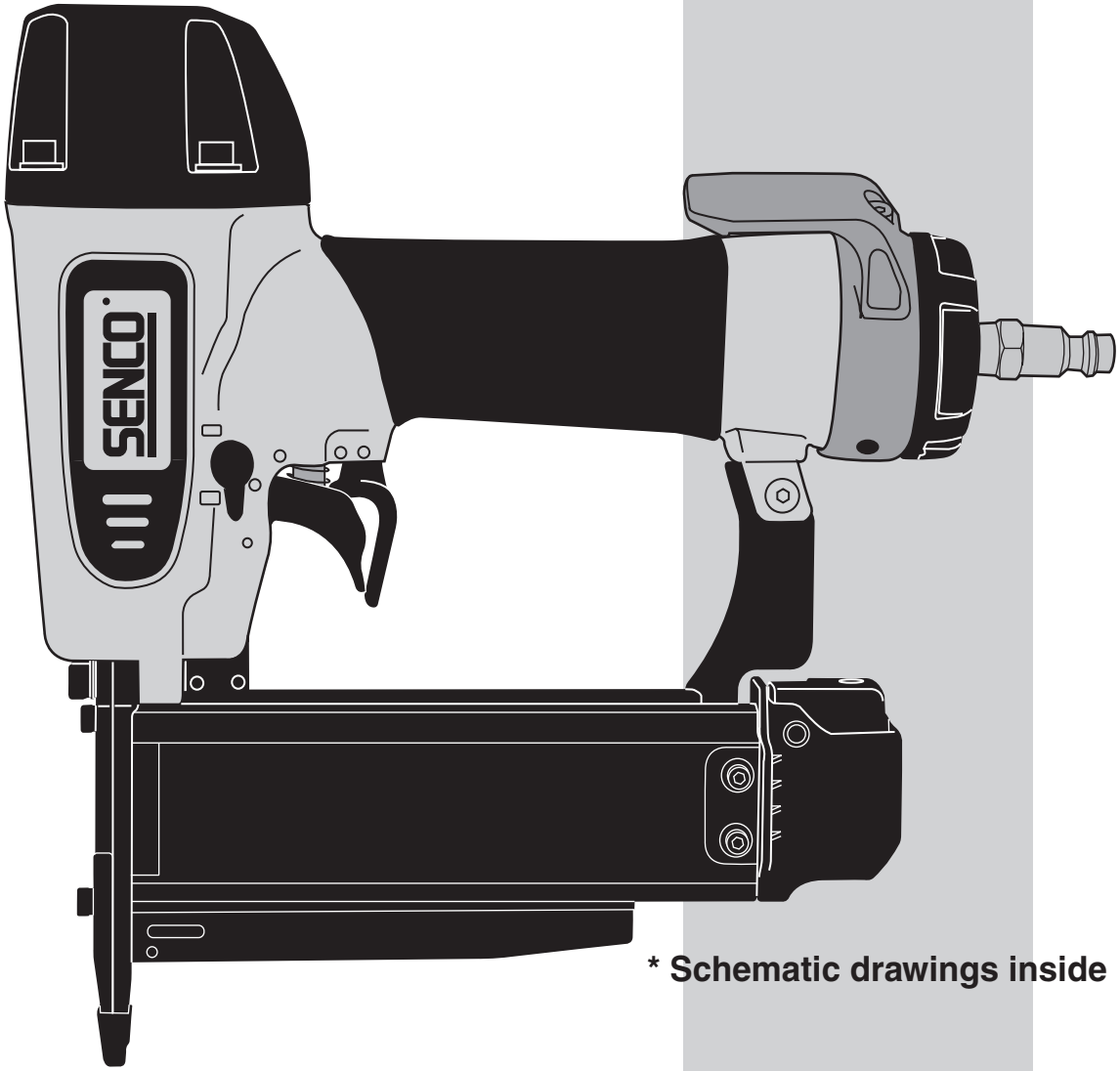

*** Schematic drawings inside**

NFG04N January 15, 2007 © 2007 by SENCO Products, Inc. Cincinnati, Ohio 45244 - U.S.A.

Senco Products, Inc.
8485 Broadwell Rd.
Cincinnati, Ohio 45244

Visit our Website www.senco.com

Questions? Comments? call SENCO's toll-free Action-line:
1-800-543-4596 (North & South America only)
or e-mail: toolprof@senco.com

FinishPro® 11

SENCO®

Tool #	Model
4N0001N	Pinner

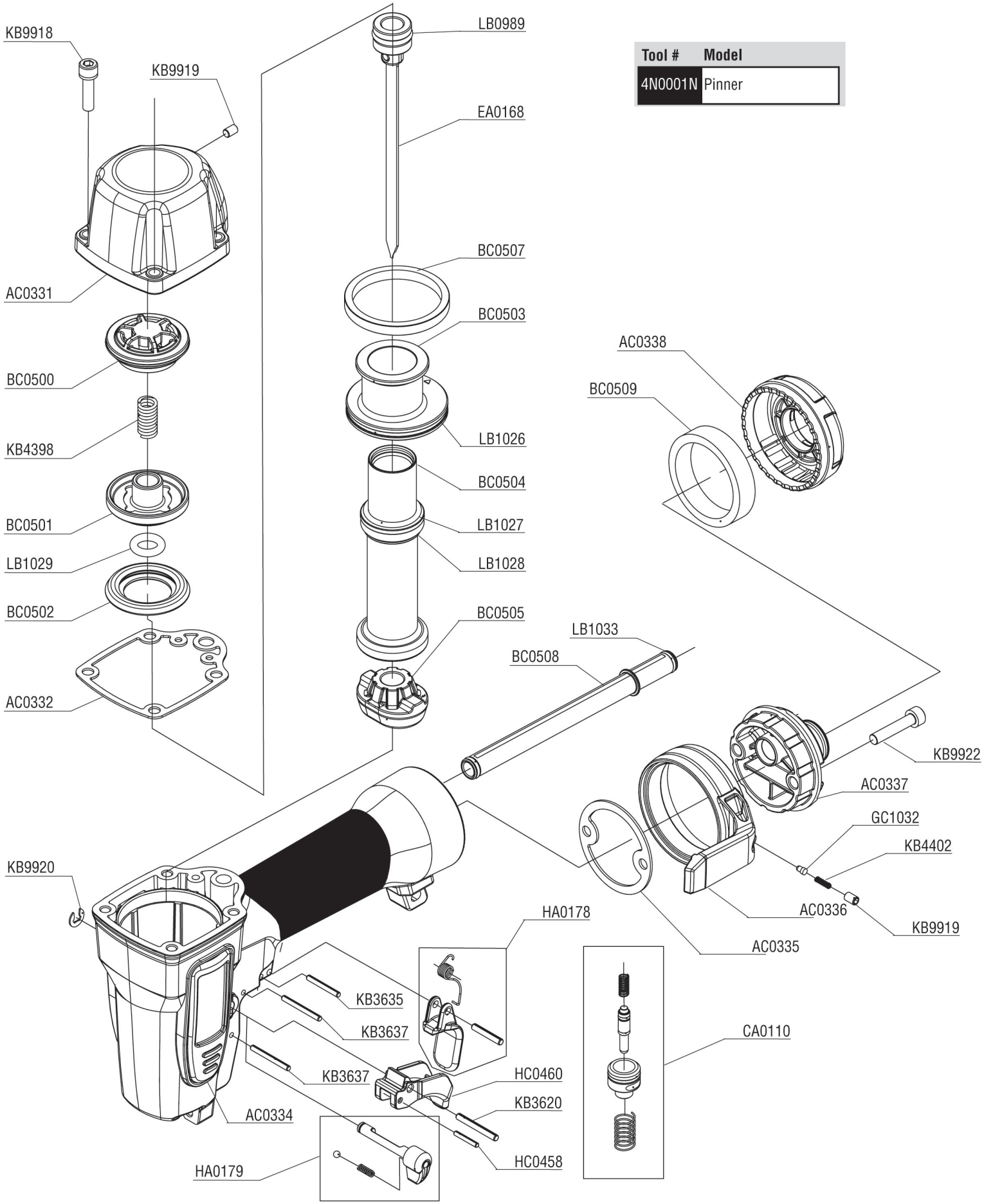

FinishPro® 11

SENCO®

KB3607
GC1044
AC0333
HC0463
KB9931
KB9929
KB9930
KB9926
GC1039
KB9925
BC0506
HC0464
GA0476
KB9927
KB9925
GA0475
GA0477
HC0468
FC0538
KB9924
KB4404
FC0537
HC0466
FC0536
HC0465
KB9872
HC0467
KB9924
FC0535
KB9923
HC0463

NFG04N January 15, 2007 © 2007 by SENCO Products, Inc. Cincinnati, Ohio 45244 - U.S.A.

Available Plugs

(Not Included with Tool)

PC0479

Ind. Interchange 1/4" NPT

PC0480 ✔

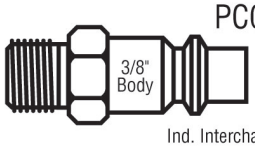

Ind. Interchange 1/4" NPT

PC0468

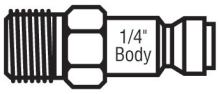

Tru-Flate 1/4" NPT

PC0469 ✔

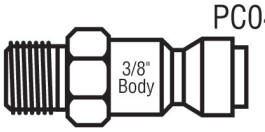

Tru-Flate 1/4" NPT

✔ *Recommended Plugs*

Plugs shown smaller than actual size

FinishPro® 11 Pinner

REPLACEMENT PARTS LIST • LISTA DE PARTES DE REPUESTO • ERSATSTEILE-LISTE • LISTE DE PIÈCES DE RECHANGE

PART NO.	DESCRIPTION	DESCRIPCIÓN	BESCHREIBUNG	DÉSIGNATION
AC0331	CAP	TAPA	KAPPE	BOUCHON
AC0332	SEAL (GASKET)	SELLO	DICHTUNG	JOINT
AC0333	MAINBODY	CARCASA	GEHÄUSE	CORPS
AC0334	COVER	CUBIERTA	ABDECKUNG	COUVERCLE
AC0335	SEAL (GASKET)	SELLO	DICHTUNG	JOINT
AC0336	RING (BELT)	ANILLO	REIFEN	ANNEAU
AC0337	CAP	TAPA	KAPPE	BOUCHON
AC0338	CAP (MUFFLER)	TAPA	KAPPE	BOUCHON
BC0500	VALVE	VÁLVULA	VENTIL	VALVE
BC0501	PISTON	PISTON	KOLBEN	PISTON
BC0502	SEAL	SELLO	DICHTUNG	JOINT
BC0503	SEAL	SELLO	DICHTUNG	JOINT
BC0504	CYLINDER	CILINDRO	ZYLINDER	CYLINDRE
BC0505	STOP, PISTON	TOPE	PUFFER	ARRÊT
BC0506	SEAL	SELLO	DICHTUNG	JOINT
BC0507	SEAL	SELLO	DICHTUNG	JOINT
BC0508	CYLINDER (TUBE)	CILINDRO	ZYLINDER	CYLINDRE
BC0509	MUFFLER	SILENCIADOR	DÄMPFER	SILENCIEUX
CA0110	TRIGGER VALVE ASY	ASAMBLE DE GATILLO VÁLVULA	AUSLÖSER/ VENTIL	GÂCHETTE/ VALVE
EA0168	PISTON/DRIVER ASSY	ASAMBLE DE PISYON Y	KOLBEN/TREIBER-	PISTON/COUTEAU
FC0535	PLATE (FRONT)	PLACA	PLATTE	PLAQUE
FC0536	PLATE (BACK)	PLACA	PLATTE	PLAQUE
FC0537	SPACER	SEPARADOR	SISTANZSTÜCK	ENTRETOISE
FC0538	SPACER	SEPARADOR	SISTANZSTÜCK	ENTRETOISE
GA0475	LATCH ASY	UÑETA	VERSCHLUSS	DOIGT DE RETENUE
GA0476	FEEDER SHOE ASY	ALIMENTADOR	NAGELSCHIEBER	POUSSOIR
GA0477	RAIL ASY., MOVABLE	ASAMBLE DE CARRIL	SCHIENE-ZUSAMMENBAU	RAIL D'ASSEMBLÉE
GC1032	DETENT	FRENO	BREMSE	FREIN
GC1039	RAIL (FIXED)	CARRIL	SCHIENE	RAIL
GC1044	BRACKET	SOPORTE	HALTERUNG	SUPPORT DE FIXATION
HA0178	TRIGGER ASSY	ASAMBLE DE GATILLO	AUSLÖSER-ZUSAMMENBAU	GACHETTED'ASSEMBLÉE
HA0179	TRIGGER ASSY (LOCK)	ASAMBLE DE GATILLO	AUSLÖSER-ZUSAMMENBAU	GACHETTED'ASSEMBLÉE
HC0458	PIN	PASADOR	STIFT	GOUPILLE
HC0460	TRIGGER	GATILLO	AUSLÖSER	GÂCHETTE
HC0463	CUSHION (PAD)	AMORTIGUADOR	SCHUTZ	COUSSIN
HC0464	COVER (TRIGGER)	CUBIERTA	ABDECKUNG	COUVERCLE
HC0465	PIN	PASADOR	STIFT	GOUPILLE
HC0466	LATCH	UÑETA	VERSCHLUSS	DOIGT DE RETENUE
HC0467	SPRING	RESORTE	FEDER	RESSORT
HC0468	PLATE (BAR)	PLACA	PLATTE	PLAQUE
KB3607	NUT	TUERCA	MUTTER	ÉCROU
KB3620	PIN (SPRING)	PASADOR	STIFT	GOUPILLE
KB3635	PIN	PASADOR	STIFT	GOUPILLE
KB3637	PIN	PASADOR	STIFT	GOUPILLE
KB4398	SPRING	RESORTE	FEDER	RESSORT
KB4402	SPRING	RESORTE	FEDER	RESSORT
KB4404	SPRING	RESORTE	FEDER	RESSORT
KB9872	SCREW (BOLT)	TORNILLO	SCHRAUBE	VIS
KB9918	SCREW (BOLT)	TORNILLO	SCHRAUBE	VIS
KB9919	SCREW	TORNILLO	SCHRAUBE	VIS
KB9920	RING	ANILLO	REIFEN	ANNEAU
KB9922	SCREW (BOLT)	TORNILLO	SCHRAUBE	VIS
KB9923	SCREW (BOLT)	TORNILLO	SCHRAUBE	VIS
KB9924	SCREW (BOLT)	TORNILLO	SCHRAUBE	VIS
KB9925	SCREW(BOLT)	TORNILLO	SCHRAUBE	VIS
KB9926	SCREW	TORNILLO	SCHRAUBE	VIS
KB9927	WASHER	ARANDELA	SCHEIBE	RONDELLE
KB9929	SCREW (BOLT)	TORNILLO	SCHRAUBE	VIS
KB9930	SCREW (BOLT)	TORNILLO	SCHRAUBE	VIS
KB9931	WASHER	ARANDELA	SCHEIBE	RONDELLE
LB0989	SEAL (O-RING)	SELLO	DICHTUNG	JOINT
LB1026	SEAL	SELLO	DICHTUNG	JOINT
LB1027	SEAL	SELLO	DICHTUNG	JOINT
LB1028	SEAL	SELLO	DICHTUNG	JOINT
LB1029	SEAL	SELLO	DICHTUNG	JOINT
LB1033	SEAL	SELLO	DICHTUNG	JOINT